Circuit:

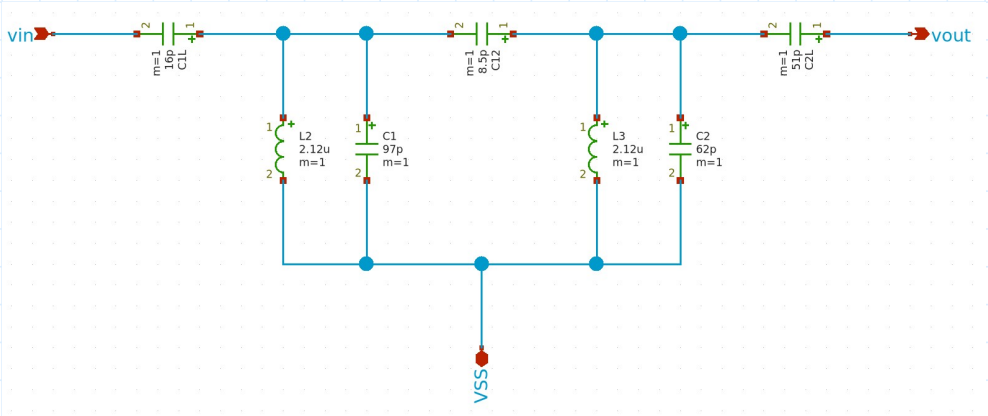

1.) Define lower and upper cut off frequencies:

$f_1 := 27.5 \cdot 10^6$ $f_2 := 28.5 \cdot 10^6$ $B := f_2 - f_1 = 1 \cdot 10^6$

2.) Define inductor core, turns and value ($L = L_1 = L_2$):

$L := 2.12 \cdot 10^{-6}$ H = 2.12uH --> 23T @ T50-6 Core --> "toroids.info/T50-6.php"

$Q_U := 240$ ... unloaded Q of the resonators

3.) Calculate ω_0:

ω_0 ... center angular frequency

$\omega_0 := 2 \cdot \pi \cdot \sqrt{f_1 \cdot f_2} = 175.901 \cdot 10^6$ rad/sec

4.) Calculate C_0:

C_0 ... nodal capacitance

$$C_0 := \frac{1}{{\omega_0}^2 \cdot L} = 15.2449796338265 \cdot 10^{-12}$$

5.) Calculate Q_L:

Q_L ... loaded filter Q

$$Q_L := \frac{\omega_0}{2 \cdot \pi \cdot (f_2 - f_1)} = 27.996$$

6.) Calculate C_{12}:

C_{12}... coupling capacitance between resonators

$$C_{12} := \frac{C_0}{Q_L \cdot \sqrt{2}} = 385.06 \cdot 10^{-15} \qquad \boxed{C_{12}} := 385 \cdot 10^{-15}$$

7.) Calculate Q_1 and Q_2:

$Q_1 = Q_2$... gives the net Q that each end section must be loaded to

$$Q_1 := \sqrt{2} \cdot Q_L = 39.592 \qquad Q_2 := \sqrt{2} \cdot Q_L = 39.592$$

8.) Calculate the Q_0:

Q_0... normalized Q

$$Q_0 := \frac{Q_U}{Q_L} = 8.573$$

9.) Calculate Q_{e1} and Q_{e2}:

$Q_{e1} = Q_{e2}$... external Q

$$Q_{e1} := \frac{1}{\left(\frac{1}{Q_1} - \frac{1}{Q_U}\right)} = 47.413 \qquad Q_{e2} := \frac{1}{\left(\frac{1}{Q_1} - \frac{1}{Q_U}\right)} = 47.413$$

10.) Calculate R_{e1} and R_{e2}:

R_{e1} and R_{e2} ... loading resistance to establish the external Q

$$R_{e1} := Q_{e1} \cdot \omega_0 \cdot L = 17.68 \cdot 10^3 \text{ Ohm} \qquad R_{e2} := Q_{e2} \cdot \omega_0 \cdot L = 17.68 \cdot 10^3 \text{ Ohm}$$

11.) Calculate C_{1L} and C_{2L}:

C_{1L} and C_{2L}... couple capacitor --> couple input load to R_{e1} and output load to R_{e2}

$R_{IN} := 1 \cdot 10^3$ Ohm ... input load

$R_{OUT} := 50$ Ohm ... output load

$$C_{1L} := \frac{1}{\omega_0 \cdot \sqrt{R_{e1} \cdot R_{IN} - R_{IN}^2}} = 1.39 \cdot 10^{-12} \qquad \boxed{C_{1L}} := 1.4 \cdot 10^{-12}$$

$$C_{2L} := \frac{1}{\omega_0 \cdot \sqrt{R_{e2} \cdot R_{OUT} - R_{OUT}^2}} = 6.05 \cdot 10^{-12} \qquad \boxed{C_{2L}} := 6.0 \cdot 10^{-12}$$

12.) Calculate C_1 and C_2:

C_1 and C_2... resonator tune capacitors

$$C_1 := C_0 - C_{1L} - C_{12} = 13.46 \cdot 10^{-12}$$

$$C_2 := C_0 - C_{2L} - C_{12} = 8.86 \cdot 10^{-12}$$

Formulas: https://archive.org/details/SolidStateDesignForTheRadioAmateur1986/page/n239

$\omega_o = 2\pi\sqrt{f_1 f_2}$ (Eq. A)

$C_o = (L\omega_o^2)^{-1}$ (Eq. B)

$Q_L = \omega_o / [2\pi (f_2 - f_1)]$ (Eq. C)

$C_{12} = C_o / (Q_L \sqrt{2})$ (Eq. D)

$Q_j = \sqrt{2}\ Q_L$ (Eq. E)
for $j = 1, 2$

$Q_{ej} = \left(\frac{1}{Q_j} - \frac{1}{Q_u}\right)^{-1}$
for $j = 1, 2$ (Eq. F)

$R_{ej} = Q_{ej}\ \omega_o L$
for $j = 1, 2$ (Eq. G)

$C_{jL} = \frac{1}{\omega_o \sqrt{R_{ej} R_L - R_L^2}}$
for $j = 1, 2$ (Eq. H)

$C_j = C_o - C_{jL} - C_{12}$
for $j = 1, 2$ (Eq. I)